MICRO AIR VEHICLE OPERATIONS MANUAL

Abdul Aldulaimi, Travis Cole, David Cosio, Matt Finch, Jacob Ruechel, and Randy Van Dusen

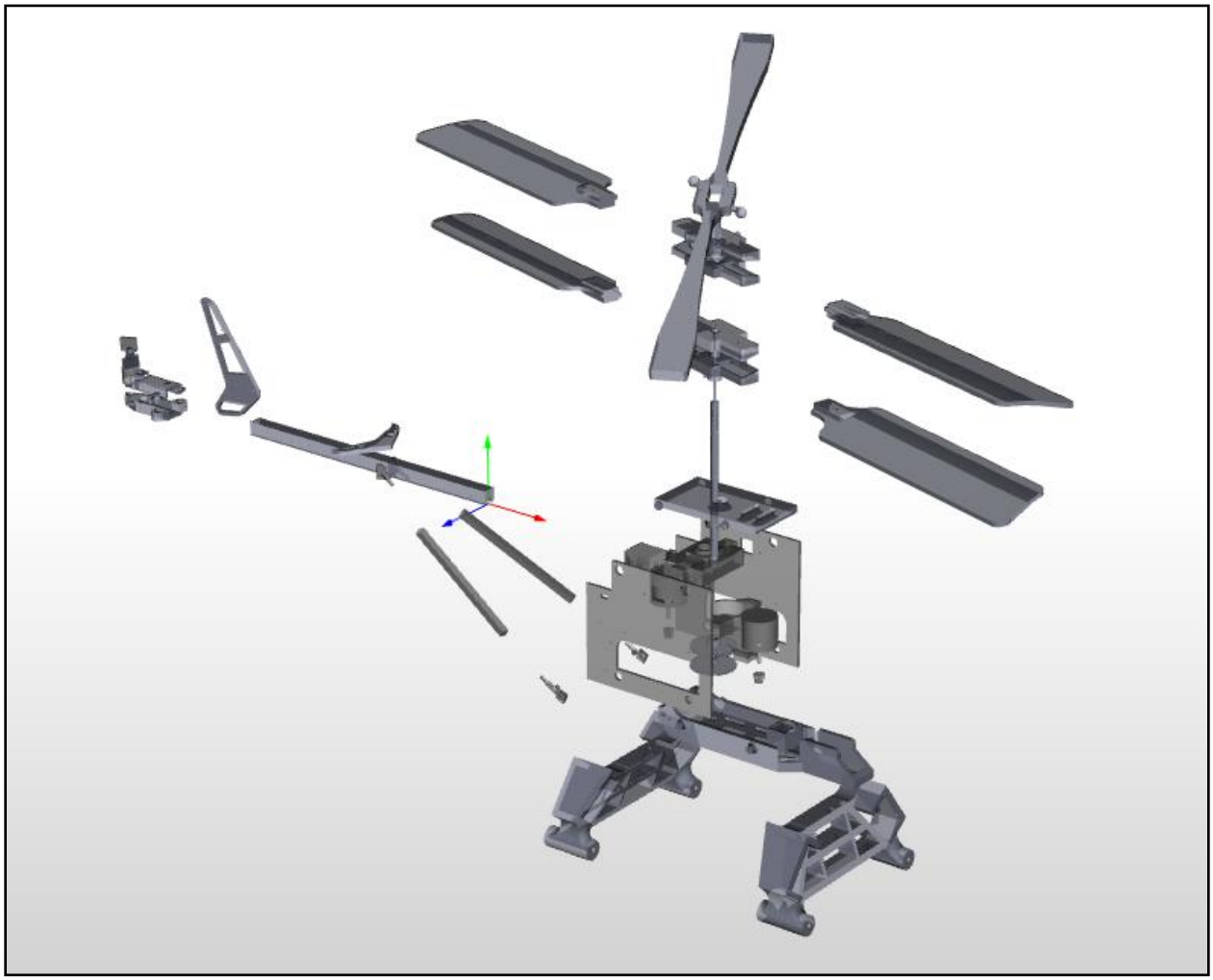

Contents

Safety Overview

This is the operations and safety manual for the up scaled U13A micro air vehicle. This vehicle is capable of spinning rigid blades at speeds exceeding 5,000 RPM. Utmost care must be exercised to keep all body parts away from the blades when vehicle is in operation. It is the responsibility of the operator to ensure that the kill switch is turned on, the transmitter is off and all battery plugs are disconnected prior to working on or handling the vehicle. This vehicle is designed to operate outdoors with minimal wind. Do not use in wet environments. Do not use inside. Do not operate near occupied areas or around power lines.

Prior to operation the vehicle should be inspected for any loose nuts or screws, especially those holding the rotor assemblies together. All electronics should be inspected for loose, frayed or kinked wires that could cause a malfunction during the operation of the vehicle. Always ensure that the batteries are fully charged and the transmitter has fresh batteries.

Figure 1: Complete Prototype

CAD Drawings

In **Figure 2** below the full prototype can be seen in an unexploded view. **Figure 3** shows an exploded view of the prototype.

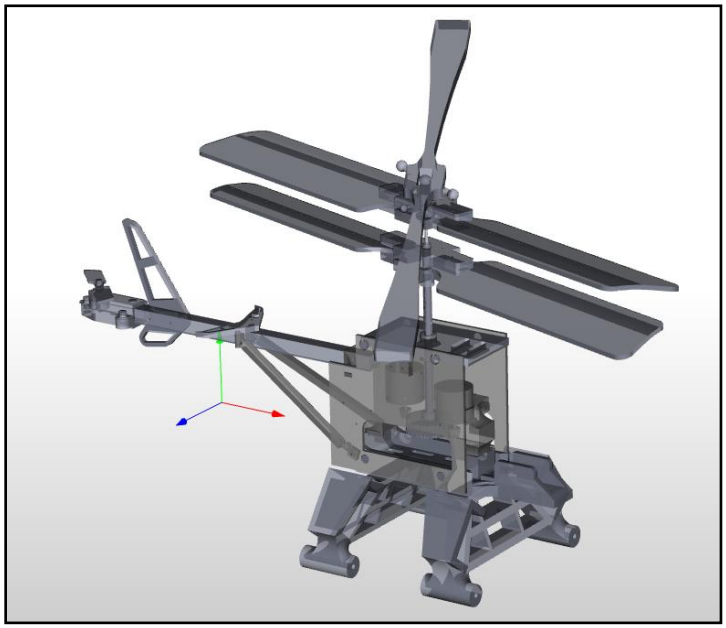

Figure 2: Unexploded Prototype CAD Drawing

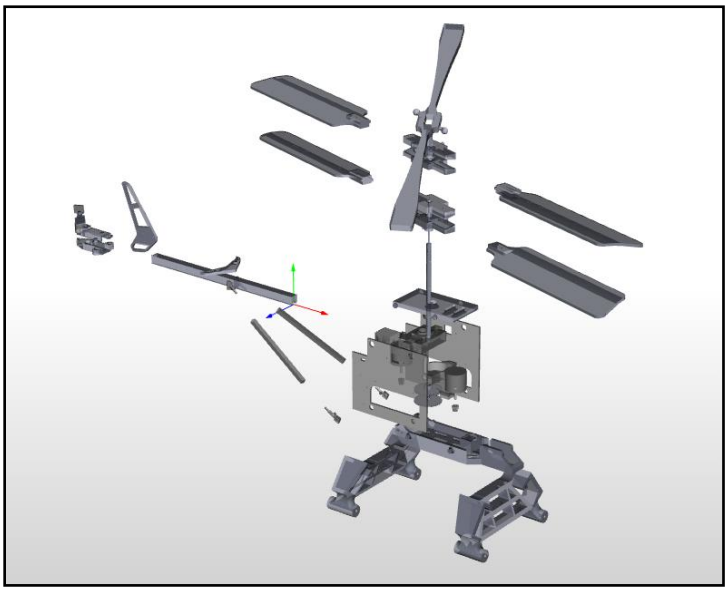

Figure 3: Exploded View CAD Drawing

Figure 4 below shows the main body core with motors and gears. Also shown in **Figures 5 & 6** are the main rotor assembly and the rear rotor assembly.

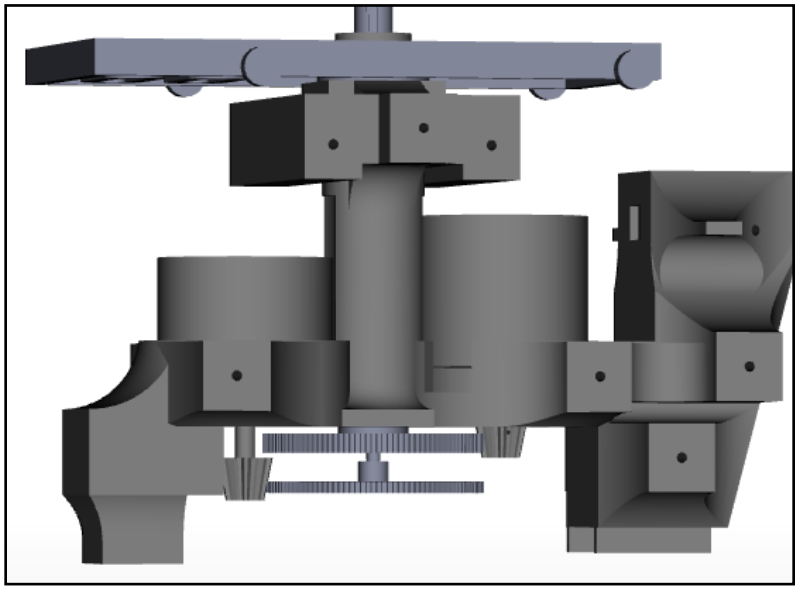

Figure 4: Main Body Core with Motors

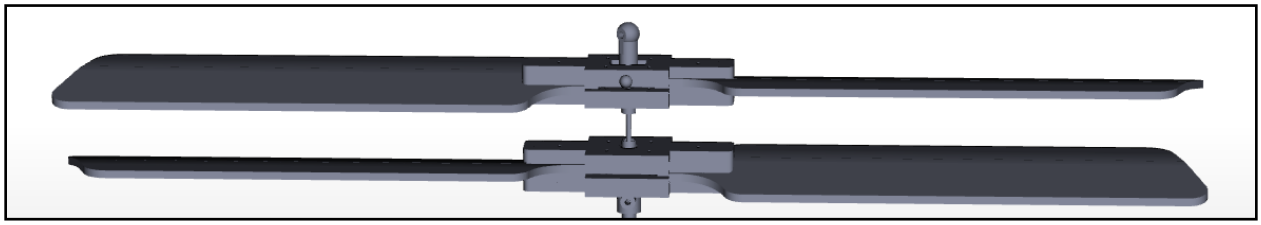

Figure 5: Blade Assembly

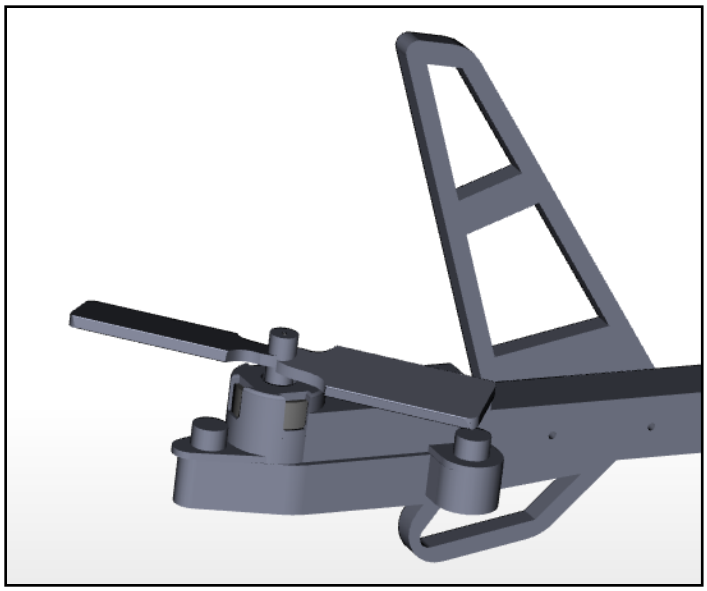

Figure 6: Rear Rotor Assembly

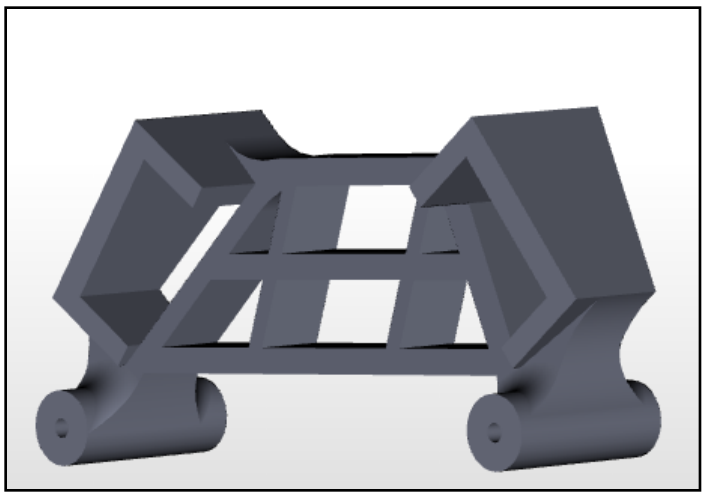

Figure 7: Landing Gear

Shown above in **Figure 7** is the landing gear.

Parts

Below is a list of parts included with the prototype:

Hobbymate Brushless Motor: 5000 RPM / V

T-Motor Brushless Motor: 1000 RPM / V

Hyperion CX G^2 Lithium-Polymer Battery: Voltage: 7.4 V

2 Cells

Capacity: 1600 mAh

Charging: 30 min – 2 hours (depends on charge rate)

FlyFun Electronic Speed Controller: Maximum current: 30A

Maximum of 4S Battery

Exceed RC 6 Channel Transmitter/Receiver: Maximum Range (no obstructions) 150+ yards

Frequency: 2.4 GHz


SW B
VR(B)
VR(A)
SW A
MODEL NO: FS-CT6B
EXCEED-RC
ON
OFF
6 CHANNEL
DIGITAL PROPORTIONAL RADIO CONTROL SYSTEM

Operation

1. Ensure that vehicle is powered down and all batteries are disconnected (shown in **Figure 8**). As an added safety feature have kill switch turned on. Check vehicle for missing parts and loose fasteners. Check electronic for loose, frayed or kinked wires. Ensure that batteries for vehicle and transmitter are fully charged.

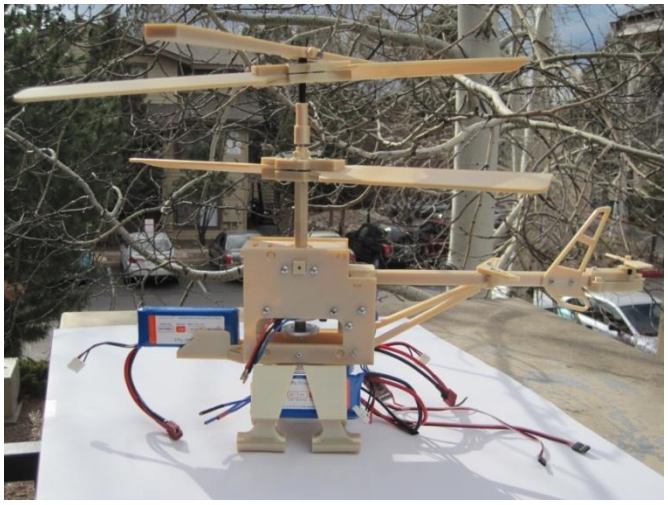

Figure 8: Completely Disconnected Vehicle

2. With the vehicle in safe operating condition, and the transmitter turned off, connect batteries to terminals and secure onto helicopter. At a safe distance and with the throttle at zero turn on transmitter (shown in **Figure 9**). Wait for warm up tone.

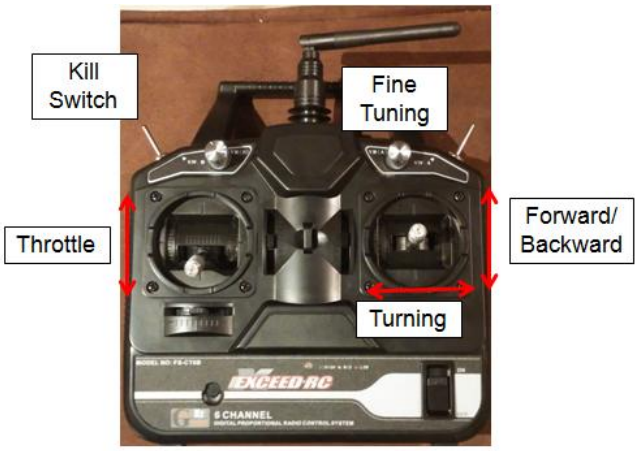

Figure 9: Throttle Positions

3. If it safe to do so, turn off the kill switch. Slowly push the throttle up until the vehicle barely lifts off. Use fine tuning knob to adjust bottom rotor if the vehicle is turning on its own. Bring vehicle to desired altitude by continuing to push up on the throttle.
4. At the desired altitude by pushing forward on the right stick the vehicle will move forward. If the stick is pushed to the rear the vehicle will travel backwards.

5. To rotate the vehicle the right stick can be pushed in the direction the vehicle needs to travel.
6. To land the vehicle, bring it to a hover a safe distance from which it can be observed. Taking note that there are no obstacles in the way slowly bring the throttle down until the vehicle has touched down. Once on the ground turn the kill switch on and bring the throttle to zero. Turn the transmitter off.
7. Once the rotors have finished spinning approach vehicle. Disconnect batteries from terminals.

Engineering CAD Drawings

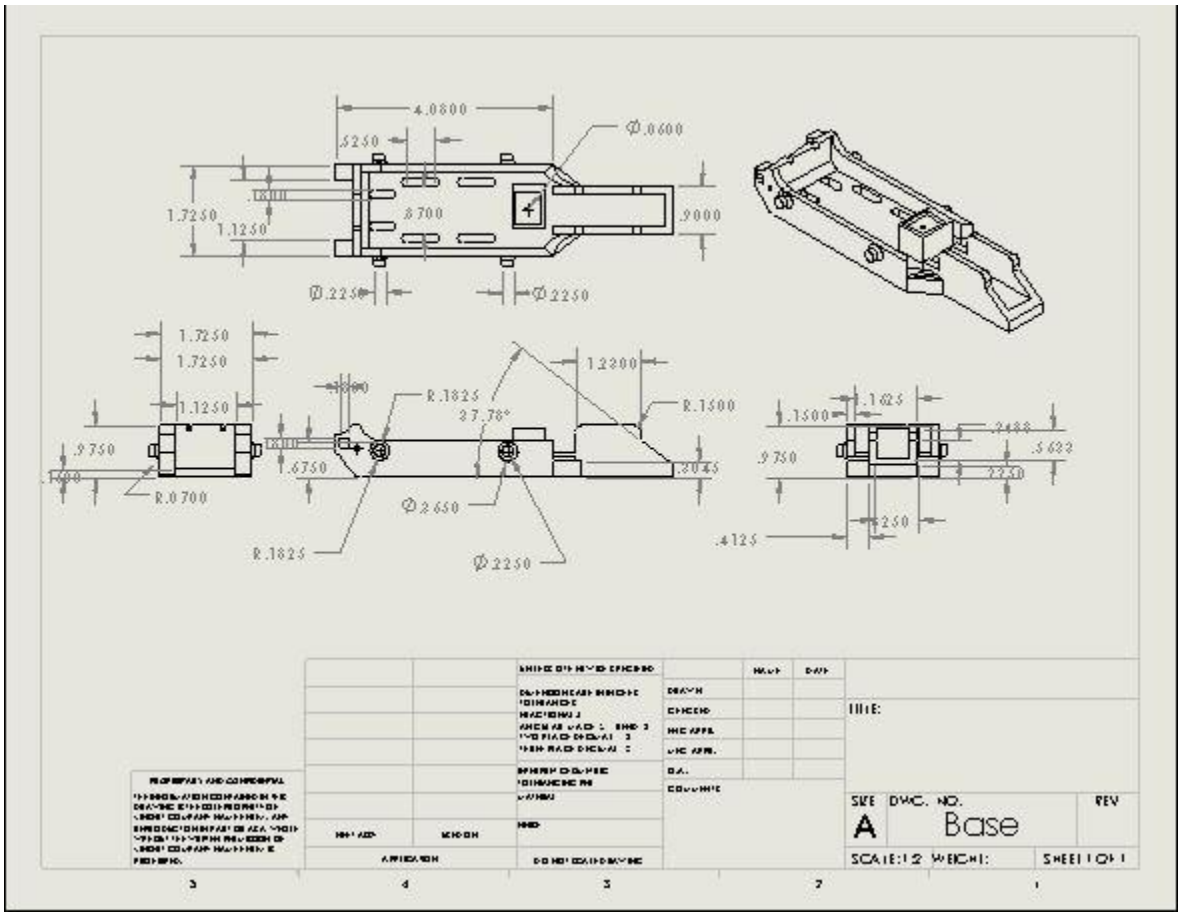

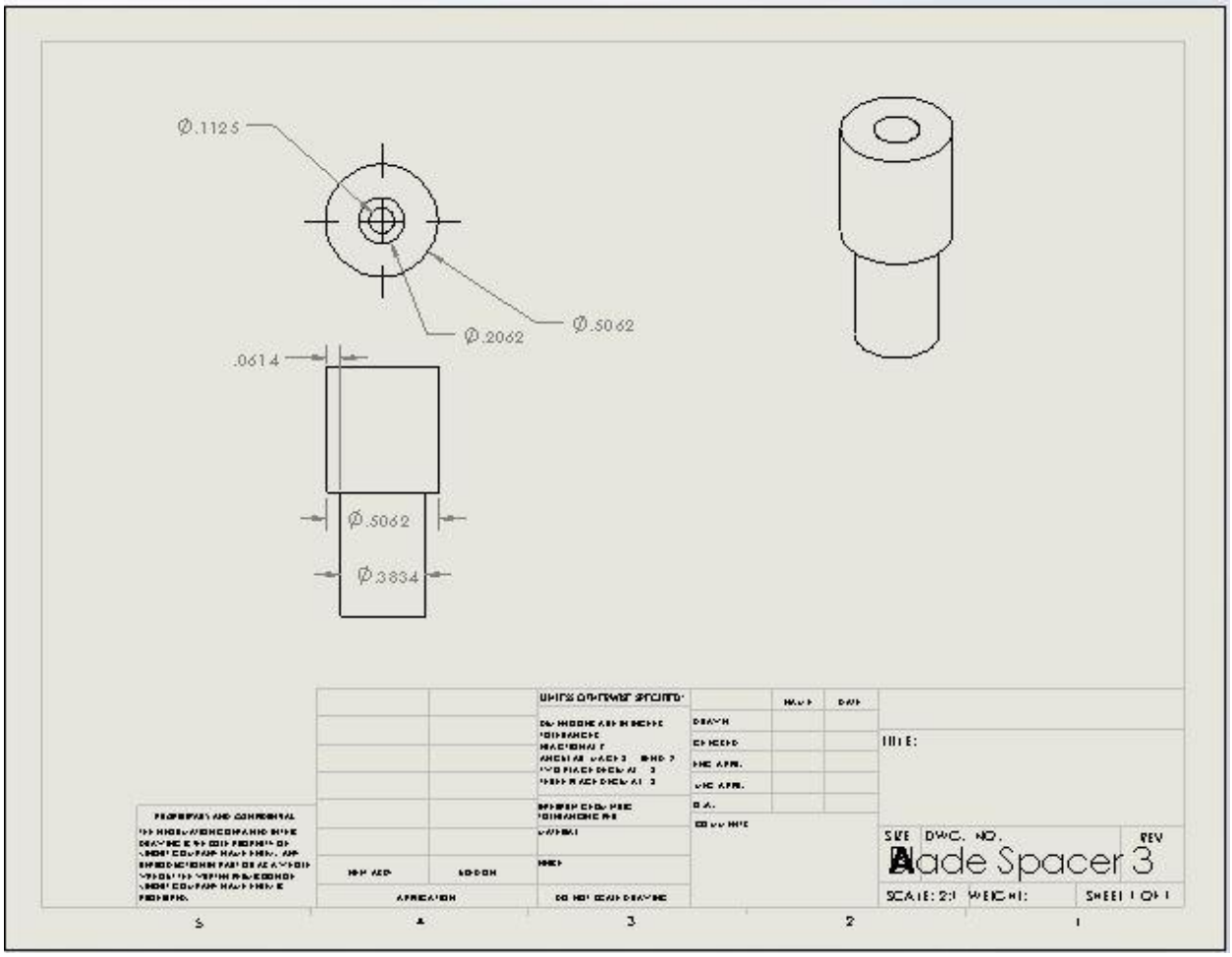
Ø.1125
Ø.2062
Ø.5062
.0614
Ø.5062
Ø.3834
Blade Spacer 3
SCALE: 2:1
SHEET 1 OF 1

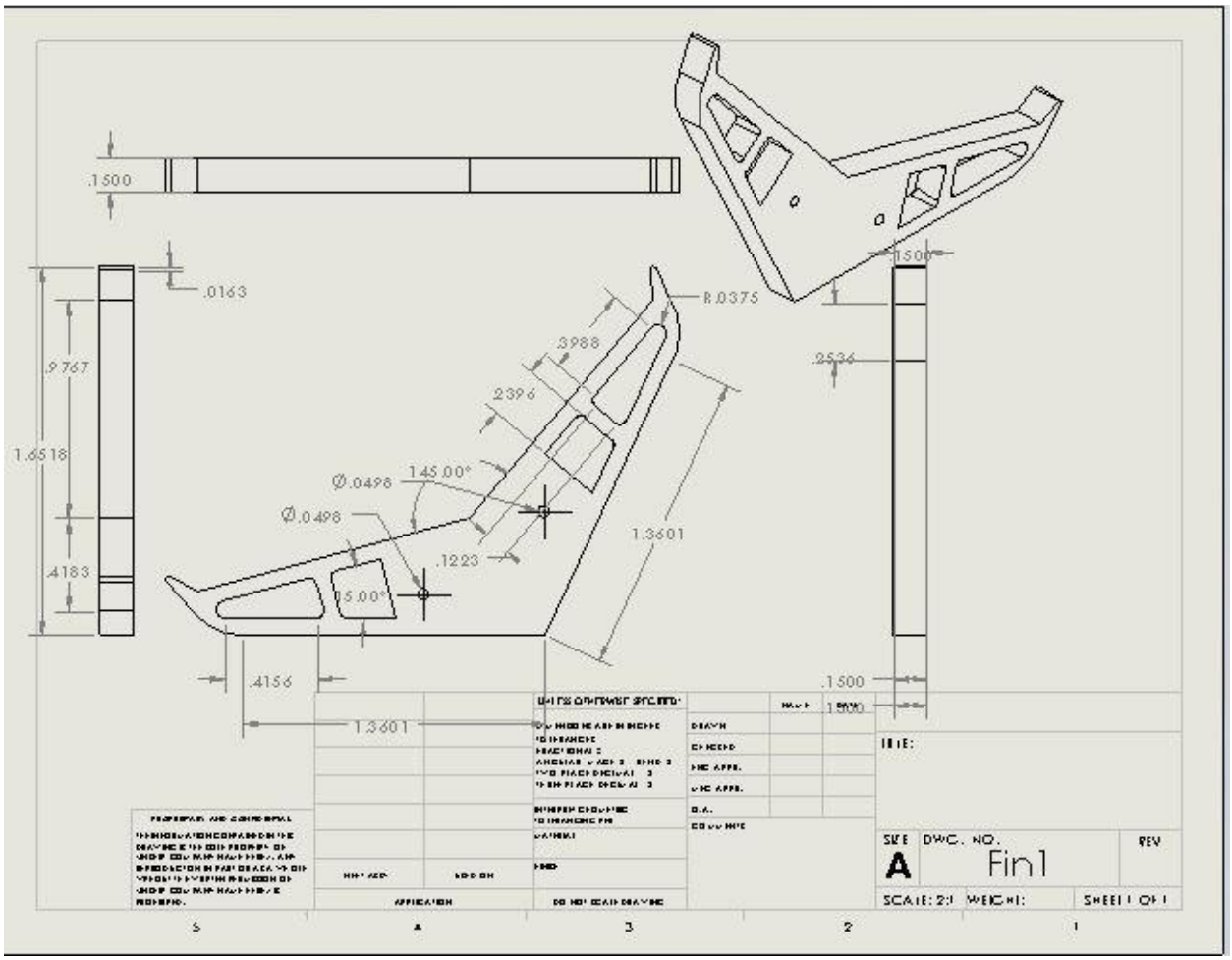
.1500
.0163
.9767
1.6518
.4183
R.0375
.3988
.2396
Ø.0498
145.00°
Ø.0498
.1223
15.00°
1.3601
.4156
.1500
.2536
.1500
1.3601
SIZE
A
DWG. NO.
Fin1
REV
SCALE: 2:1
WEIGHT:
SHEET 1 OF 1

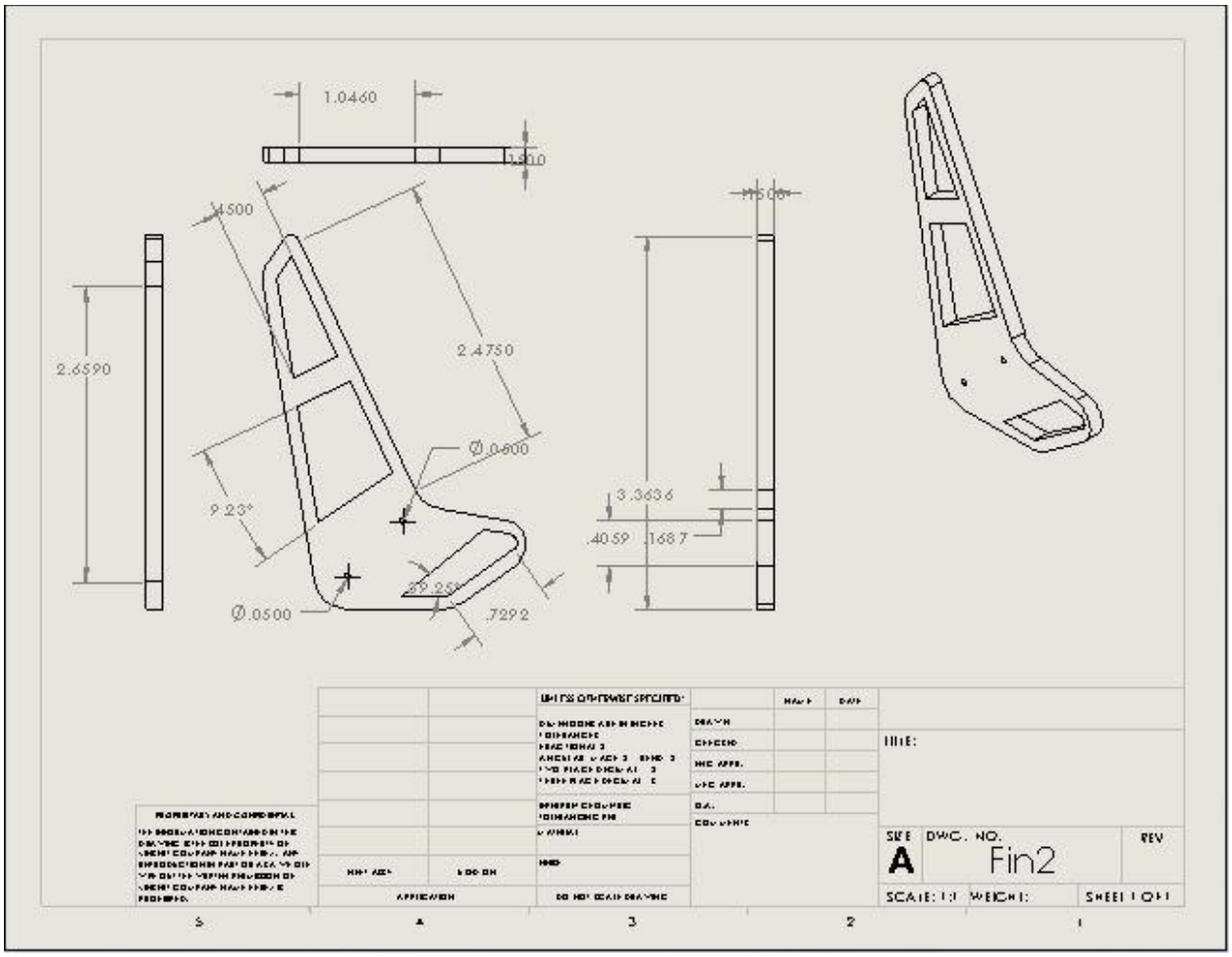
1.0460
1.500
.4500
2.4750
2.6590
Ø.0600
9.23°
3.3636
.4059
.1687
Ø.0500
.7292
SIZE
A
DWG. NO.
Fin2
REV
SCALE: 1:1
WEIGHT:
SHEET 1 OF 1

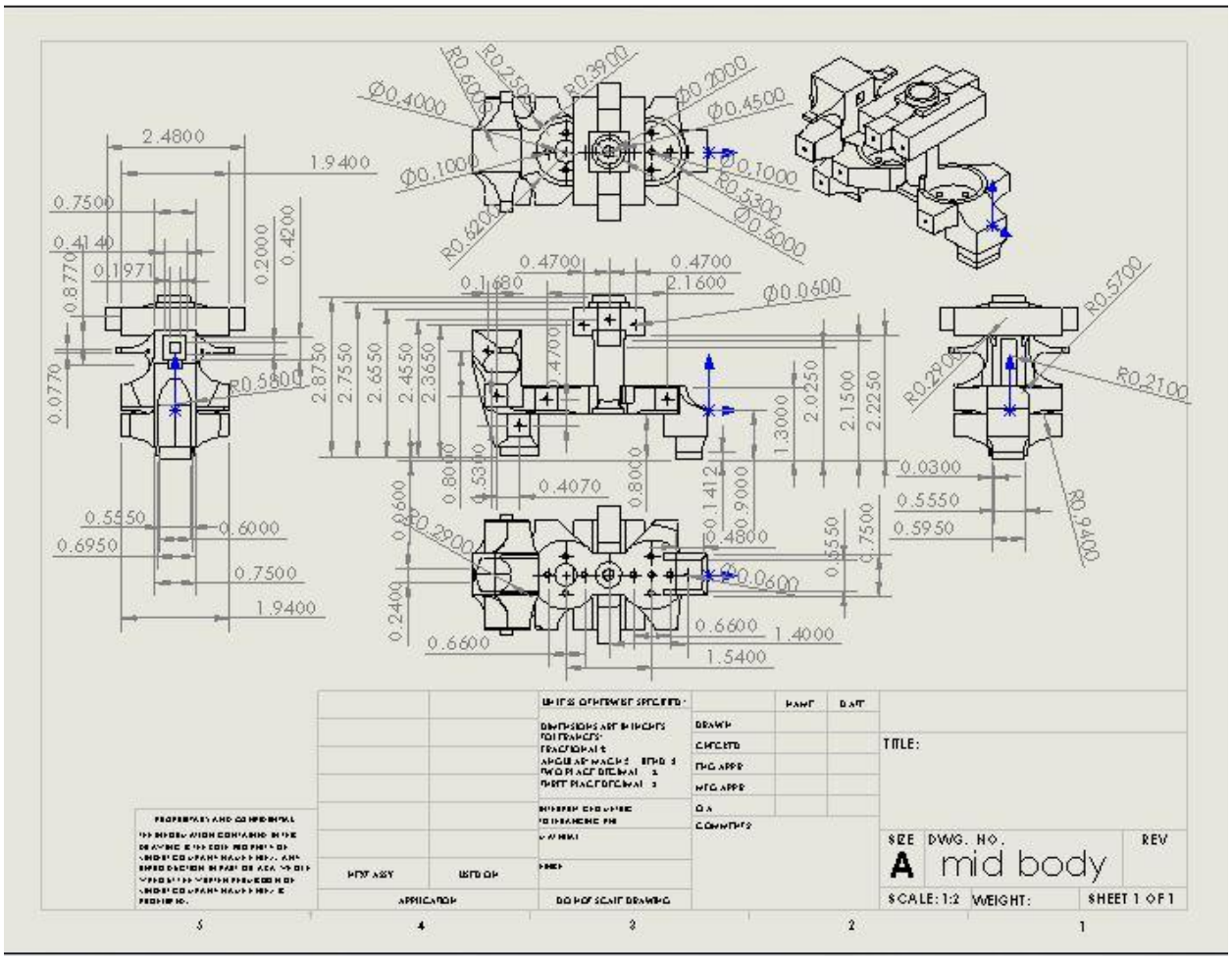
TITLE:
SIZE
A
DWG. NO.
mid body
REV
SCALE: 1:2
WEIGHT:
SHEET 1 OF 1

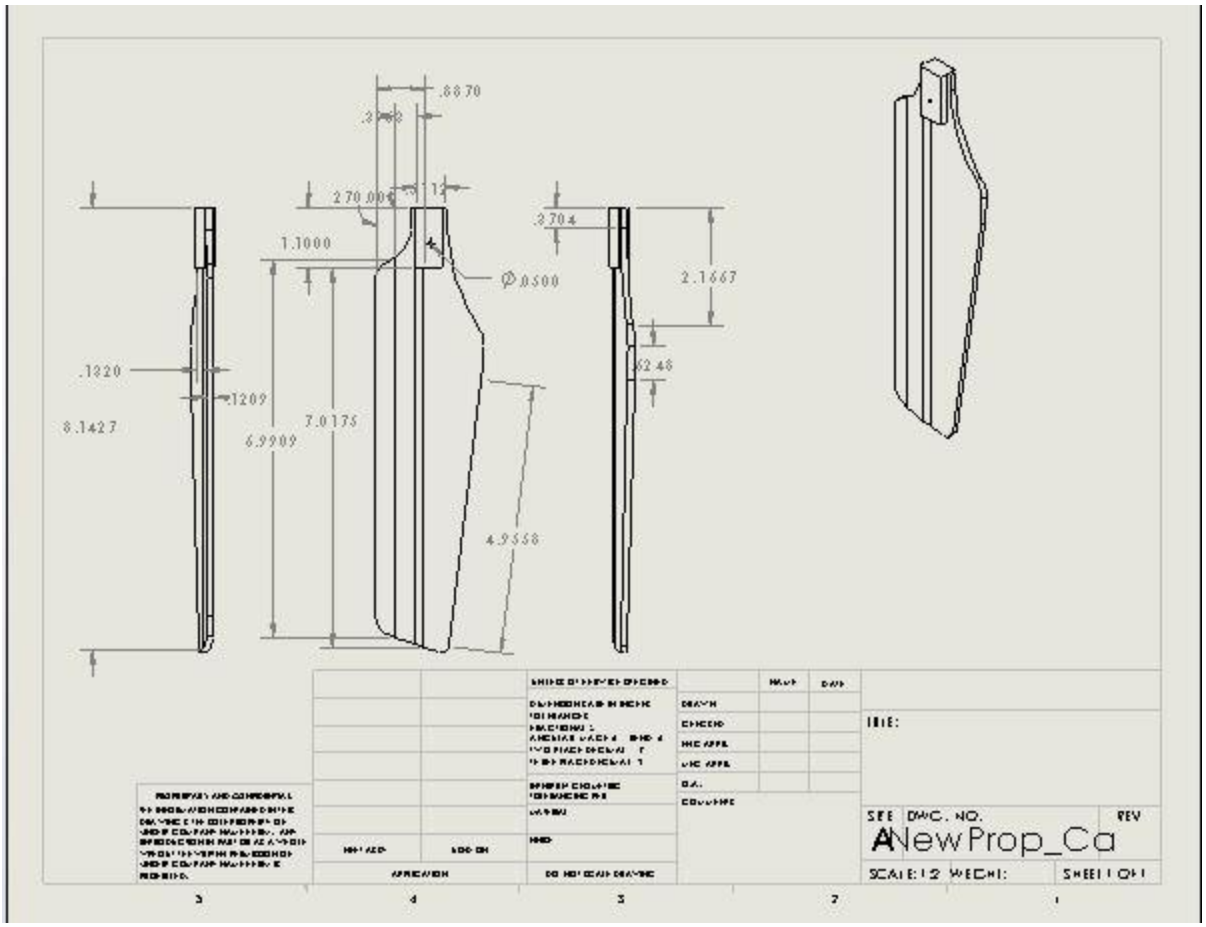
.8870
270.000°
1.1000
Ø.0500
.3704
2.1667
.1320
.1209
8.1427
7.0175
6.9909
4.9558
TITLE:
SIZE
DWG. NO.
REV
ANewProp_Ca
SCALE: 1:2
WEIGHT:
SHEET 1 OF 1

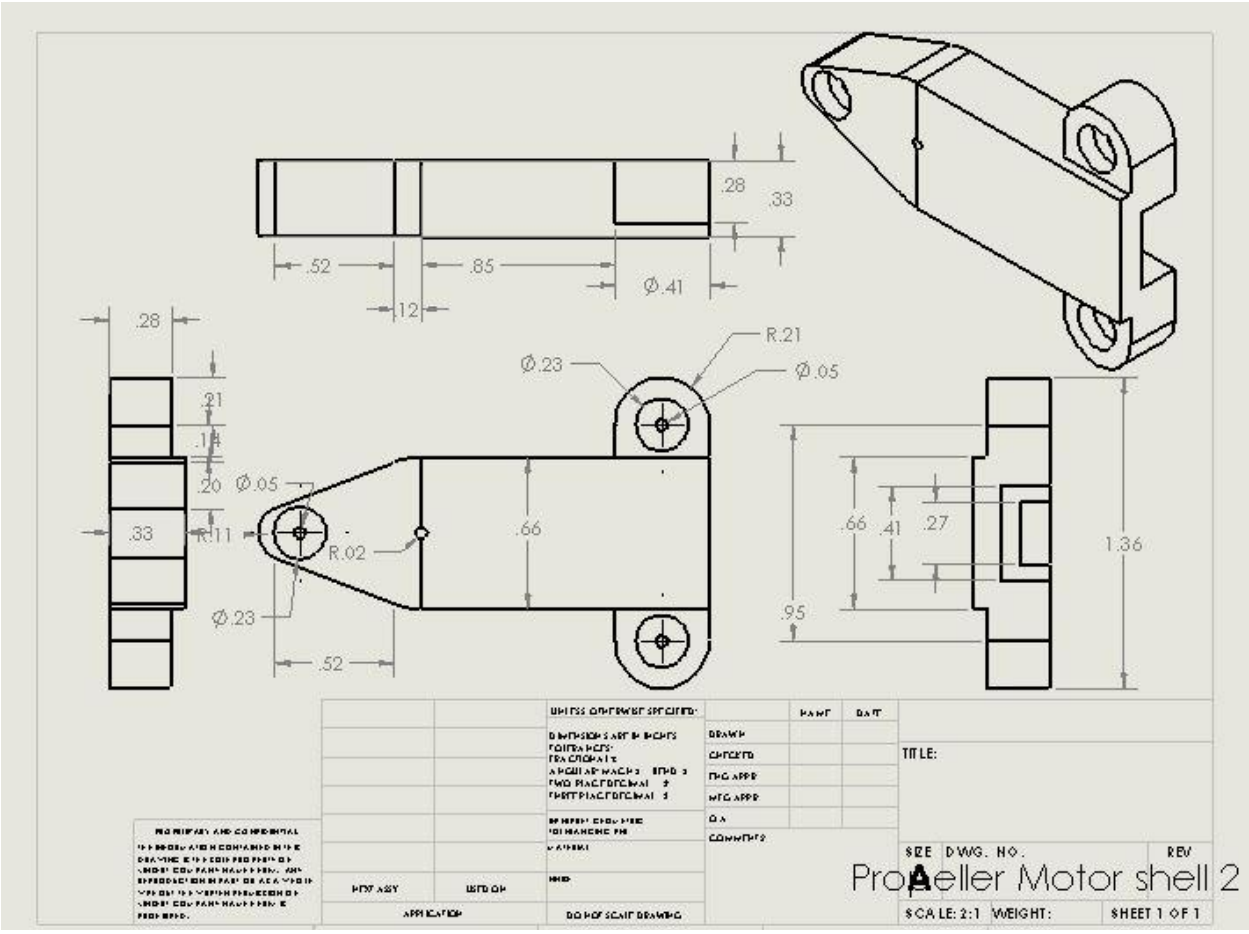
.28
.33
.52
.85
Ø.41
.12
.28
.21
.14
.20
Ø.05
.33
R.11
R.02
Ø.23
.52
.66
Ø.23
R.21
Ø.05
.66
.41
.27
.95
1.36
TITLE:
SIZE
DWG. NO.
REV
A
Propeller Motor shell 2
SCALE: 2:1
WEIGHT:
SHEET 1 OF 1

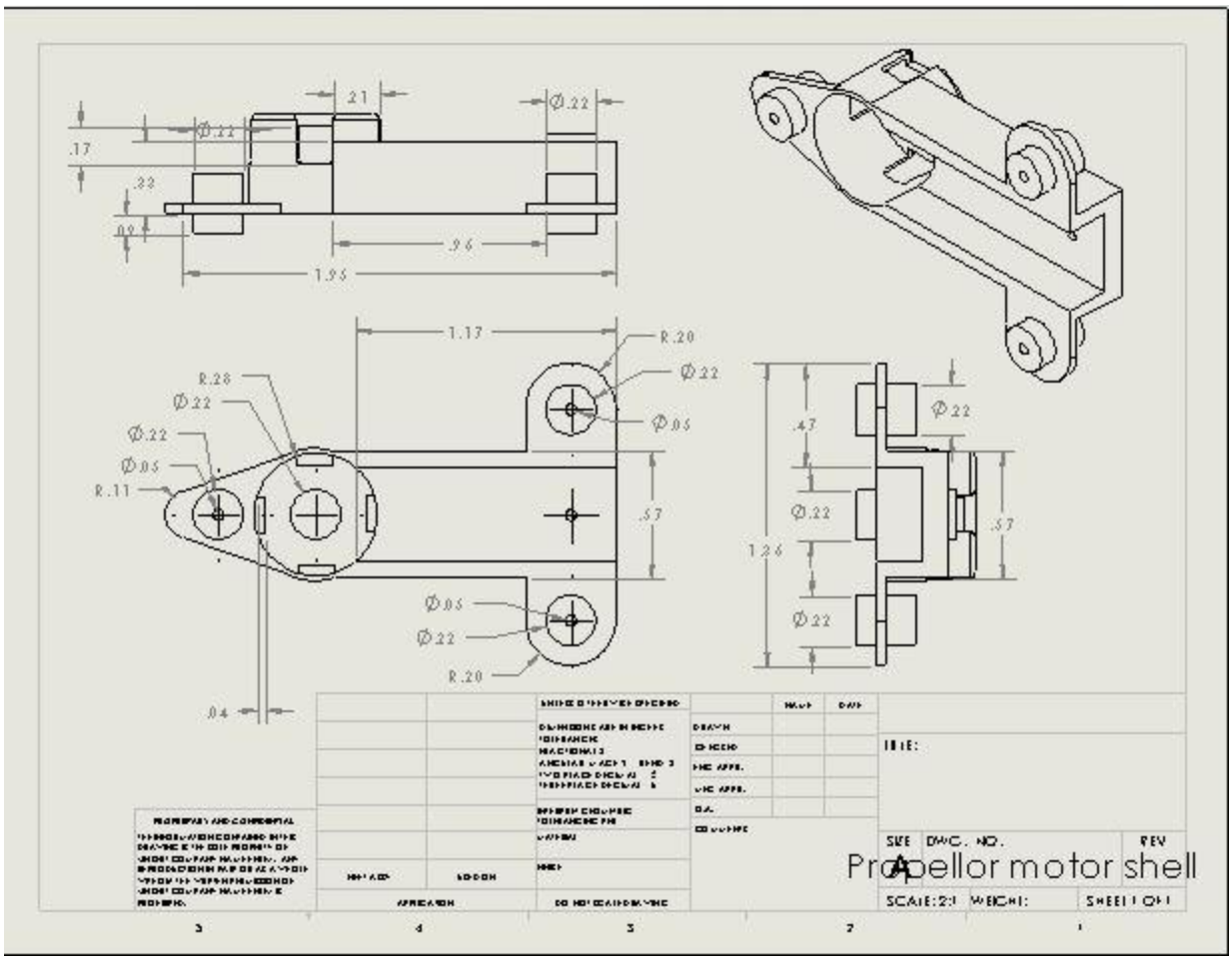
.21
Ø.22
.17
.33
.09
.96
1.95
1.17
R.20
R.28
Ø.05
R.11
.57
.04
.47
1.26
Propellor motor shell
SIZE
DWG. NO.
REV
SCALE:2:1
WEIGHT:
SHEET 1 OF 1

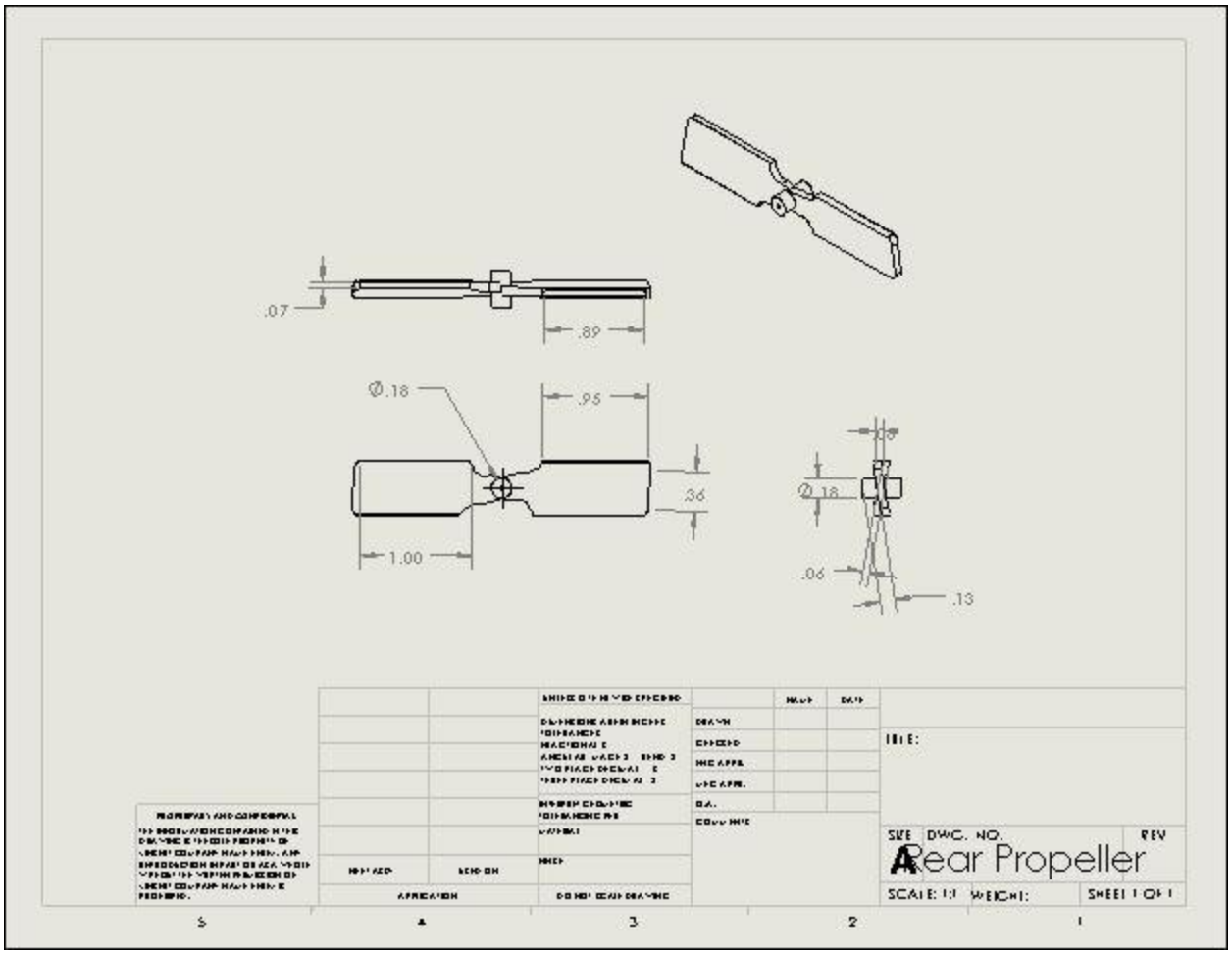
.07
.89
Ø.18
.95
.36
1.00
Ø.18
.06
.13
TITLE:
SIZE
DWG. NO.
REV
Rear Propeller
SCALE: 1:1
WEIGHT:
SHEET 1 OF 1

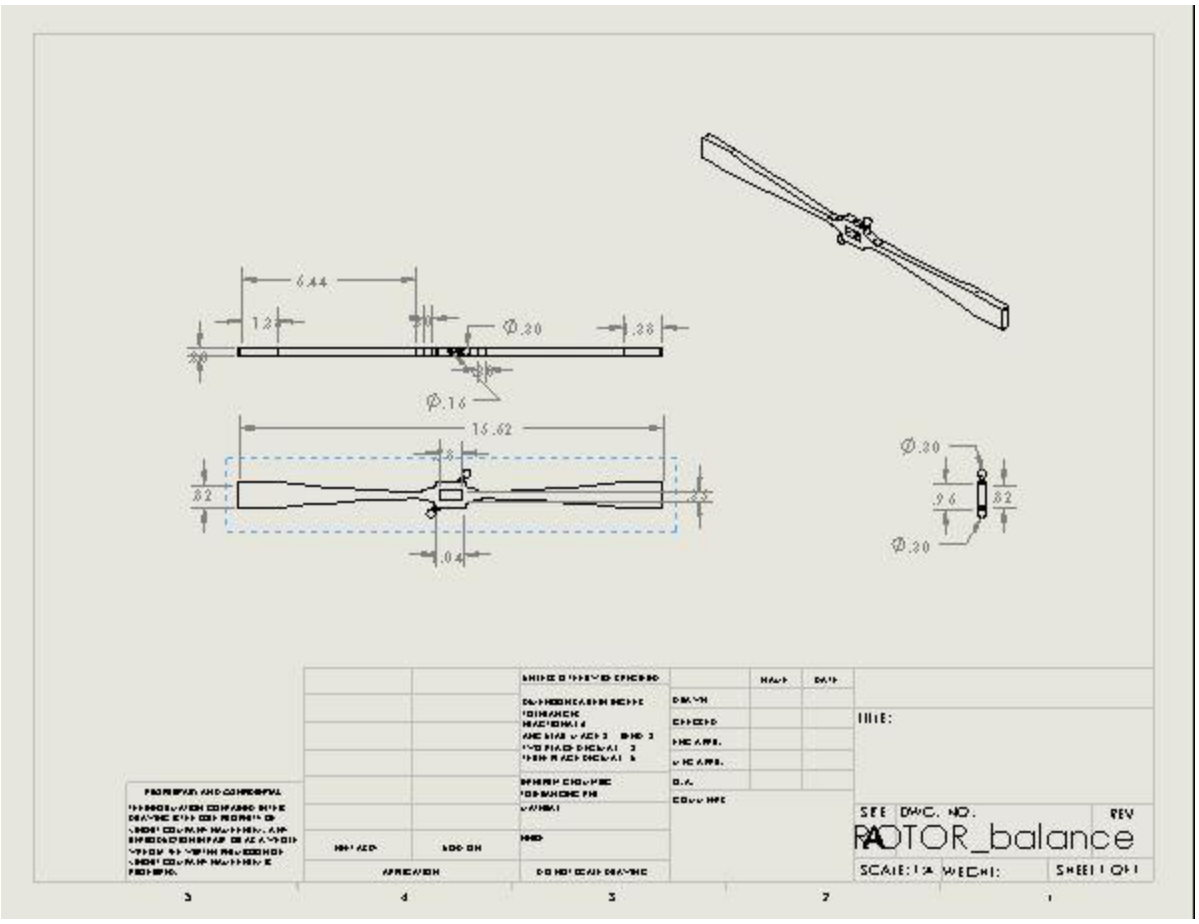
6.44
1.2
Ø.20
.28
Ø.16
15.62
.82
.04
Ø.30
.96
.82
Ø.30
TITLE:
SIZE
DWG. NO.
REV
ROTOR_balance
SCALE: 1:4
WEIGHT:
SHEET 1 OF 1

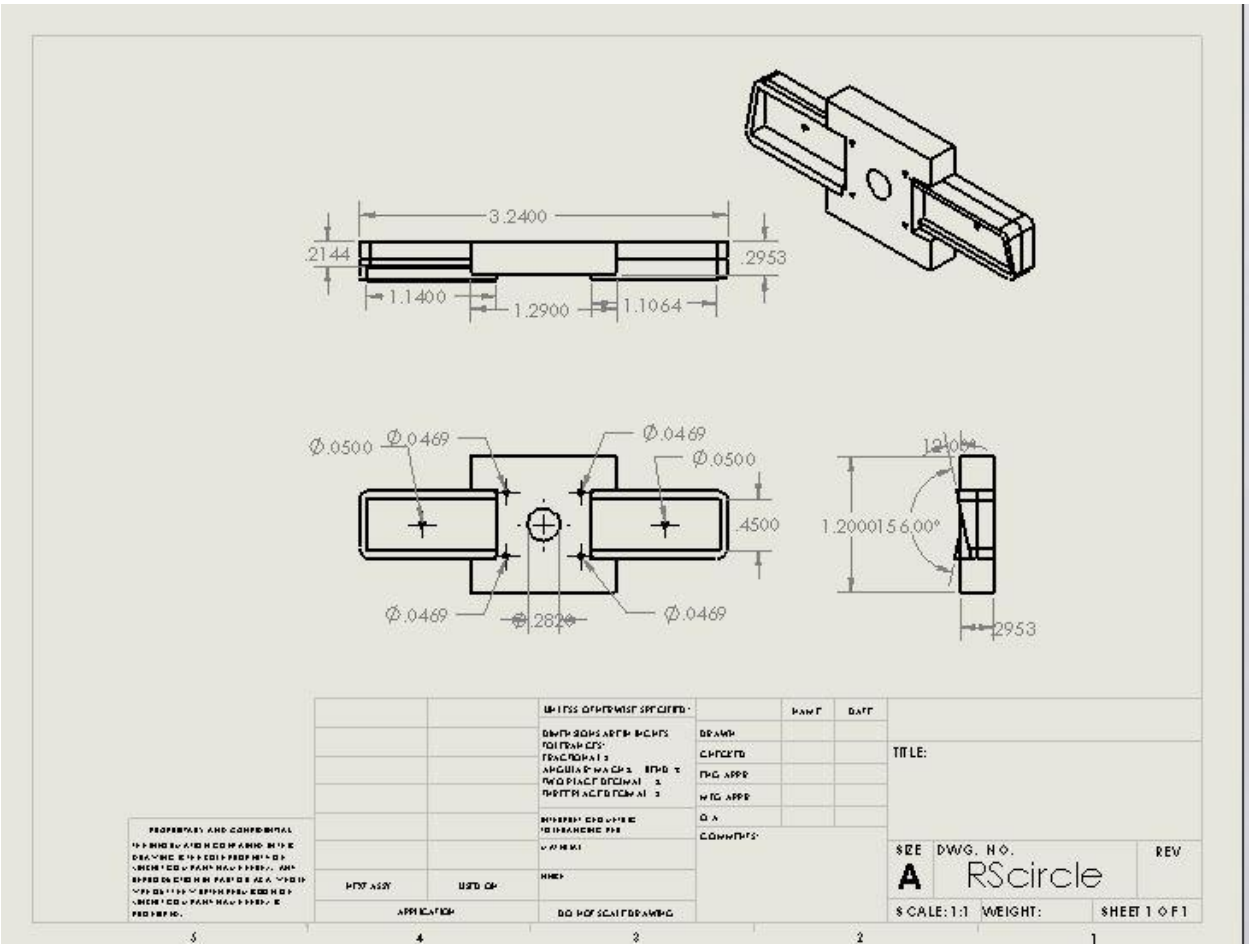
3.2400
.2144
.2953
1.1400
1.2900
1.1064
Ø.0500
Ø.0469
Ø.0469
Ø.0500
.4500
Ø.0469
Ø.0469
1.2000
156.00°
.2953
TITLE:
SIZE
A
DWG. NO.
RScircle
REV
SCALE: 1:1
WEIGHT:
SHEET 1 OF 1

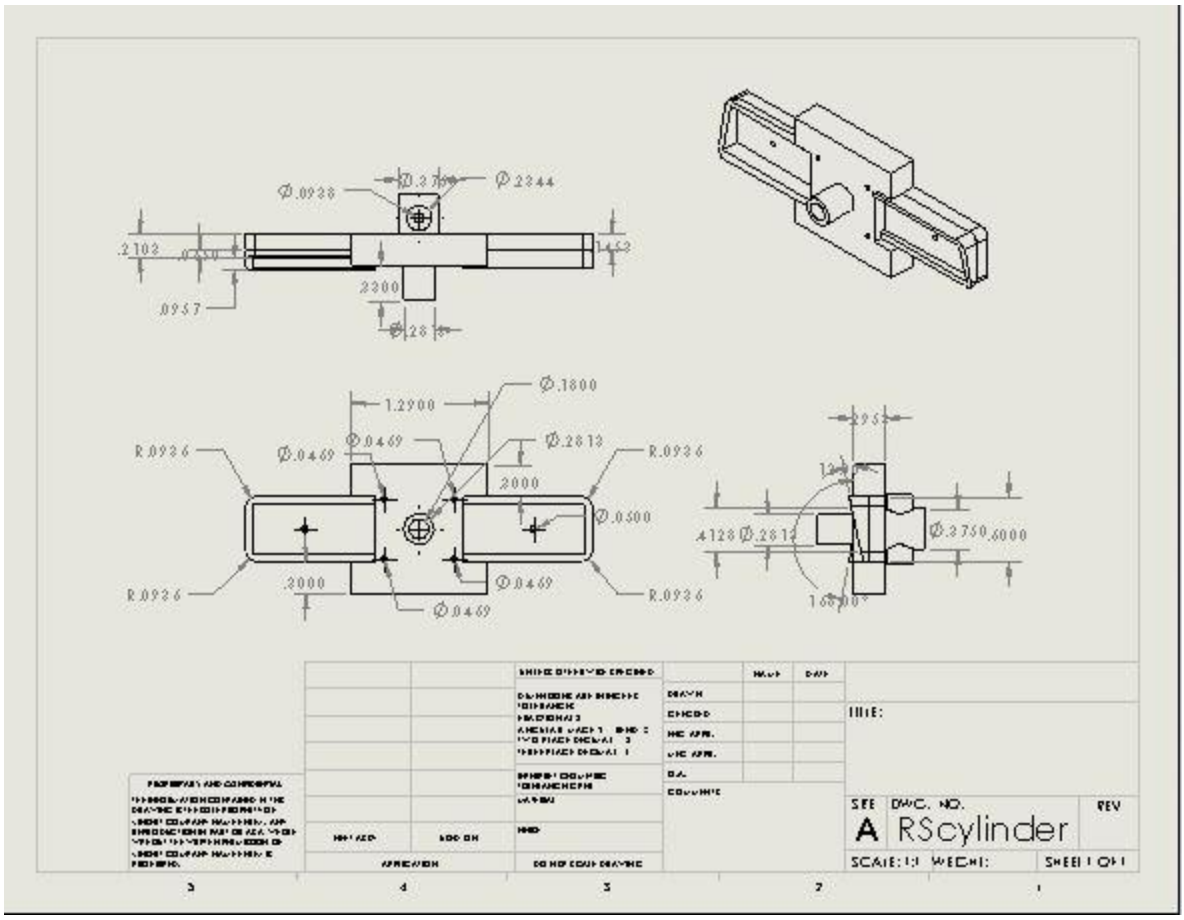
Ø.0938
Ø.2344
.2102
.0957
.2200
Ø.1800
1.2900
R.0936
Ø.0469
Ø.2813
.2000
Ø.0500
.2000
Ø.0469
Ø.0469
R.0936
R.0936
R.0936
.4128
Ø.2813
Ø.3750
.6000
TITLE:
SIZE
A
DWG. NO.
RScylinder
REV
SCALE: 1:1
WEIGHT:
SHEET 1 OF 1

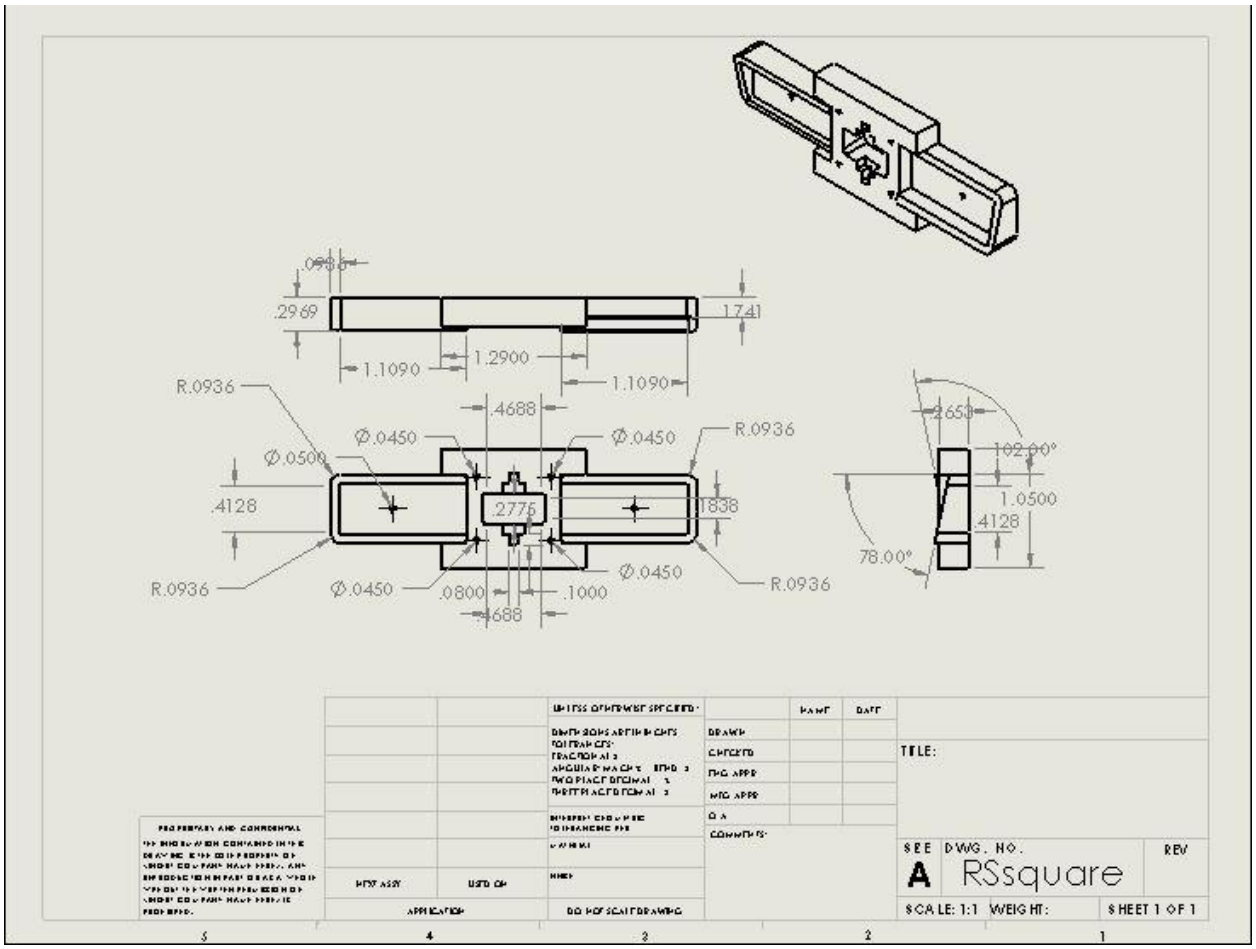
.2969
1.7741
1.1090
1.2900
1.1090
R.0936
.4688
Ø.0450
Ø.0450
R.0936
Ø.0500
.4128
.2776
.1838
R.0936
Ø.0450
.0800
.1000
Ø.0450
R.0936
.4688
.2653
102.00°
1.0500
.4128
78.00°
TITLE:
SIZE
A
DWG. NO.
RSsquare
REV
SCALE: 1:1
WEIGHT:
SHEET 1 OF 1

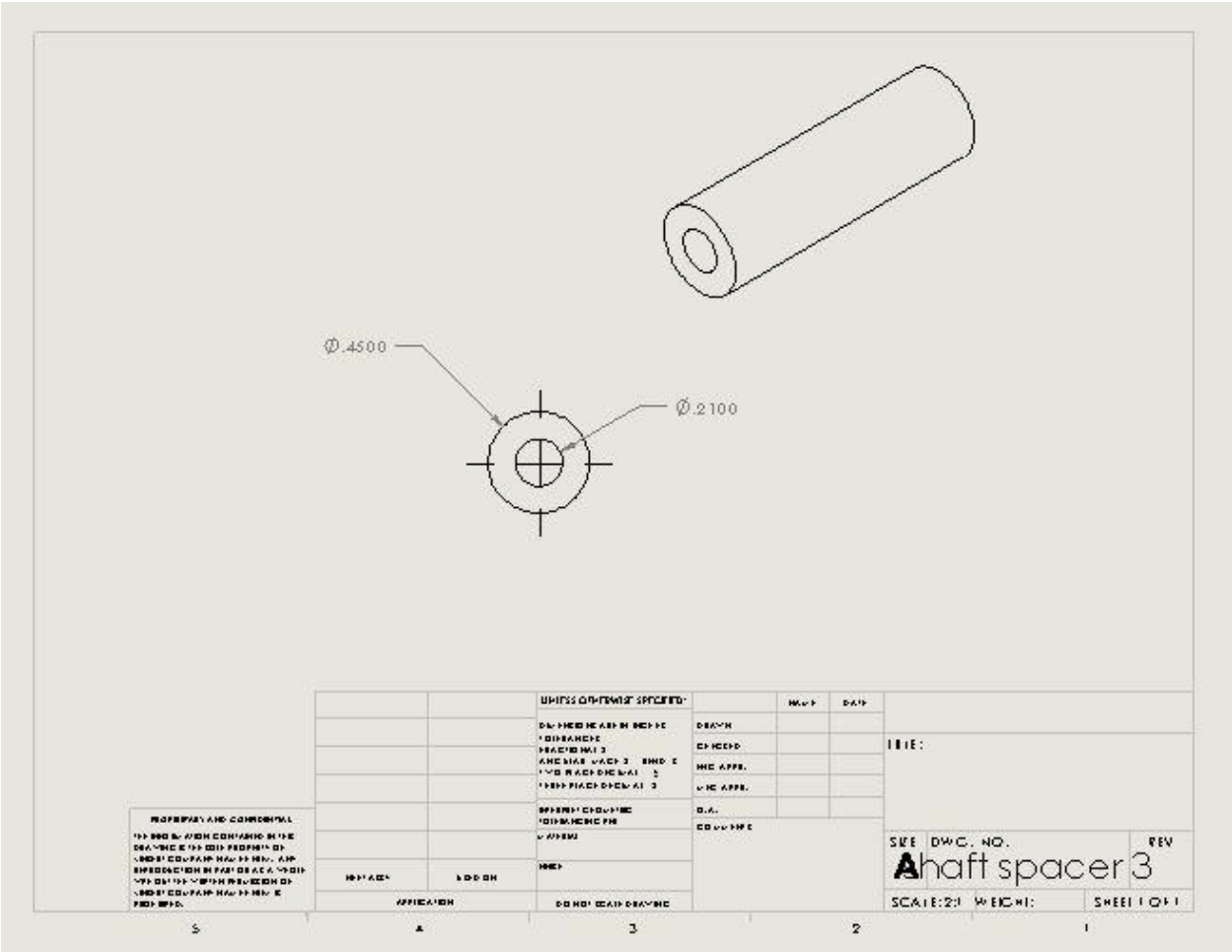
Ø.4500
Ø.2100
haft spacer 3

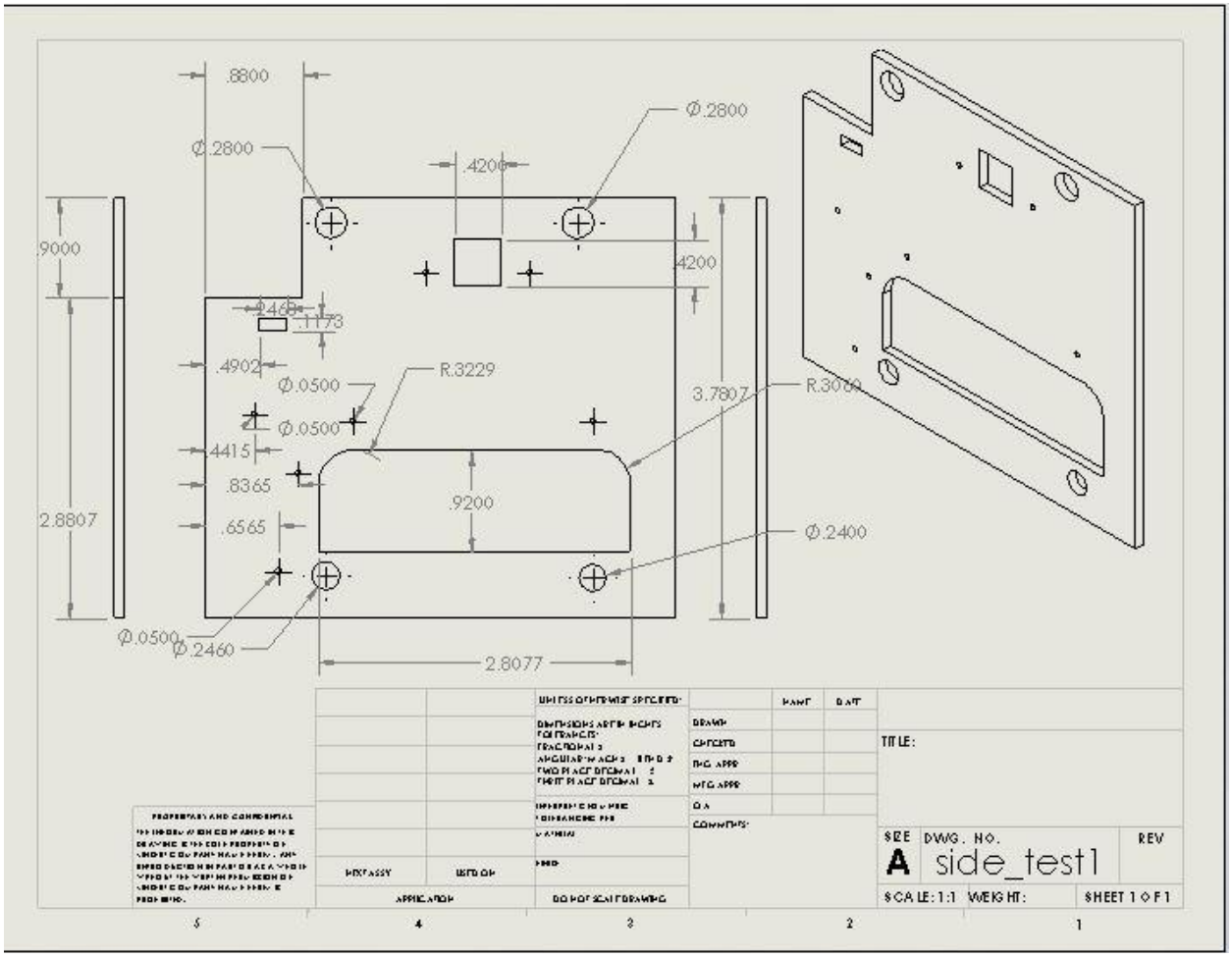
.8800
Ø.2800
Ø.2800
.4206
.4200
.9000
.4468
.1173
.4902
Ø.0500
R.3229
Ø.0500
.4415
.8365
.6565
.9200
2.8807
3.7807
R.3000
Ø.2400
Ø.0500
Ø.2460
2.8077
TITLE:
SIZE
A
DWG. NO.
side_test1
REV
SCALE: 1:1
WEIGHT:
SHEET 1 OF 1

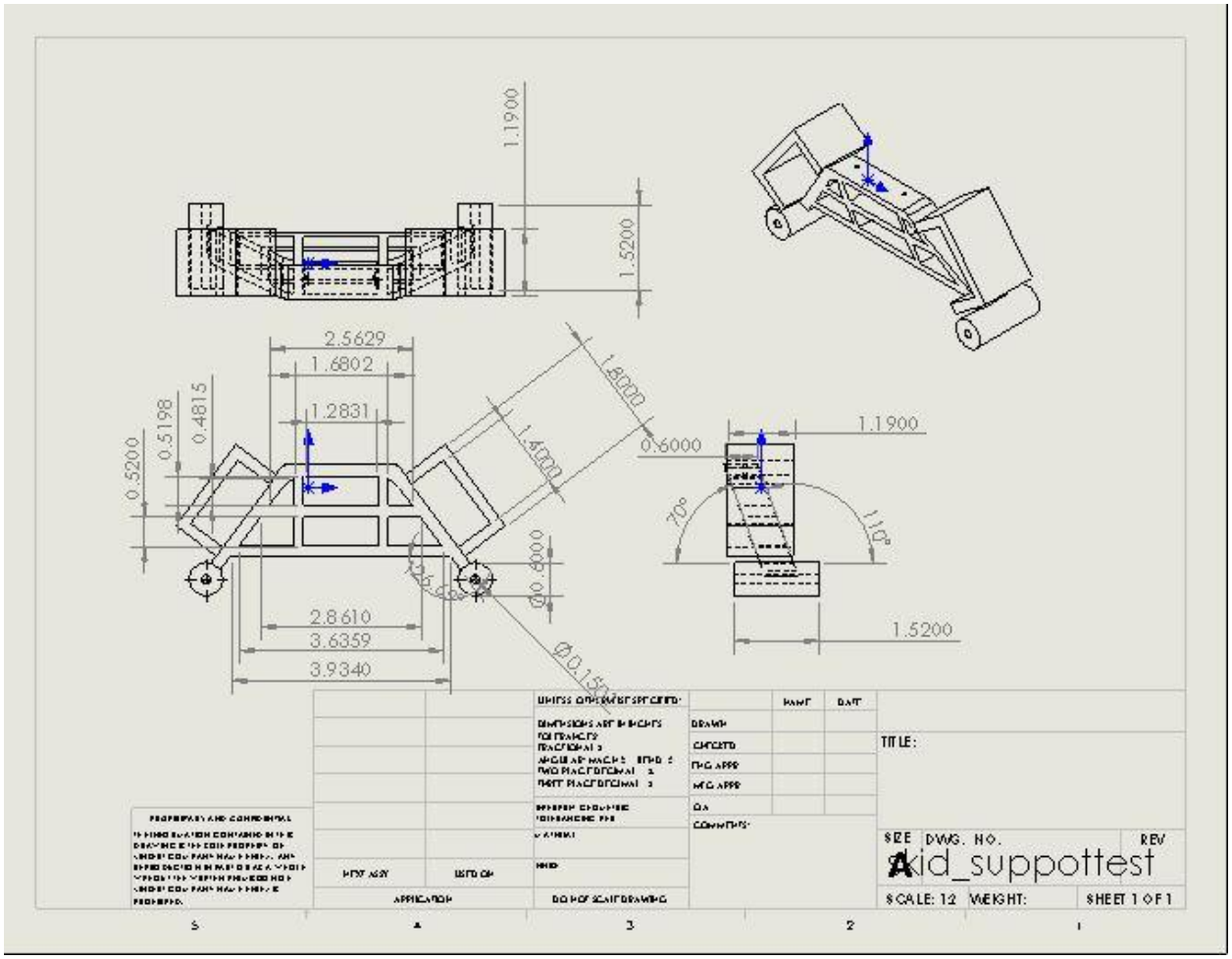
1.1900
1.5200
2.5629
1.6802
1.2831
0.5198
0.4815
0.5200
1.8000
1.4000
0.6000
1.1900
70°
110°
1.5200
2.8610
3.6359
3.9340
TITLE:
SIZE
DWG. NO.
REV
Kid_suppottest
SCALE: 1:2
WEIGHT:
SHEET 1 OF 1

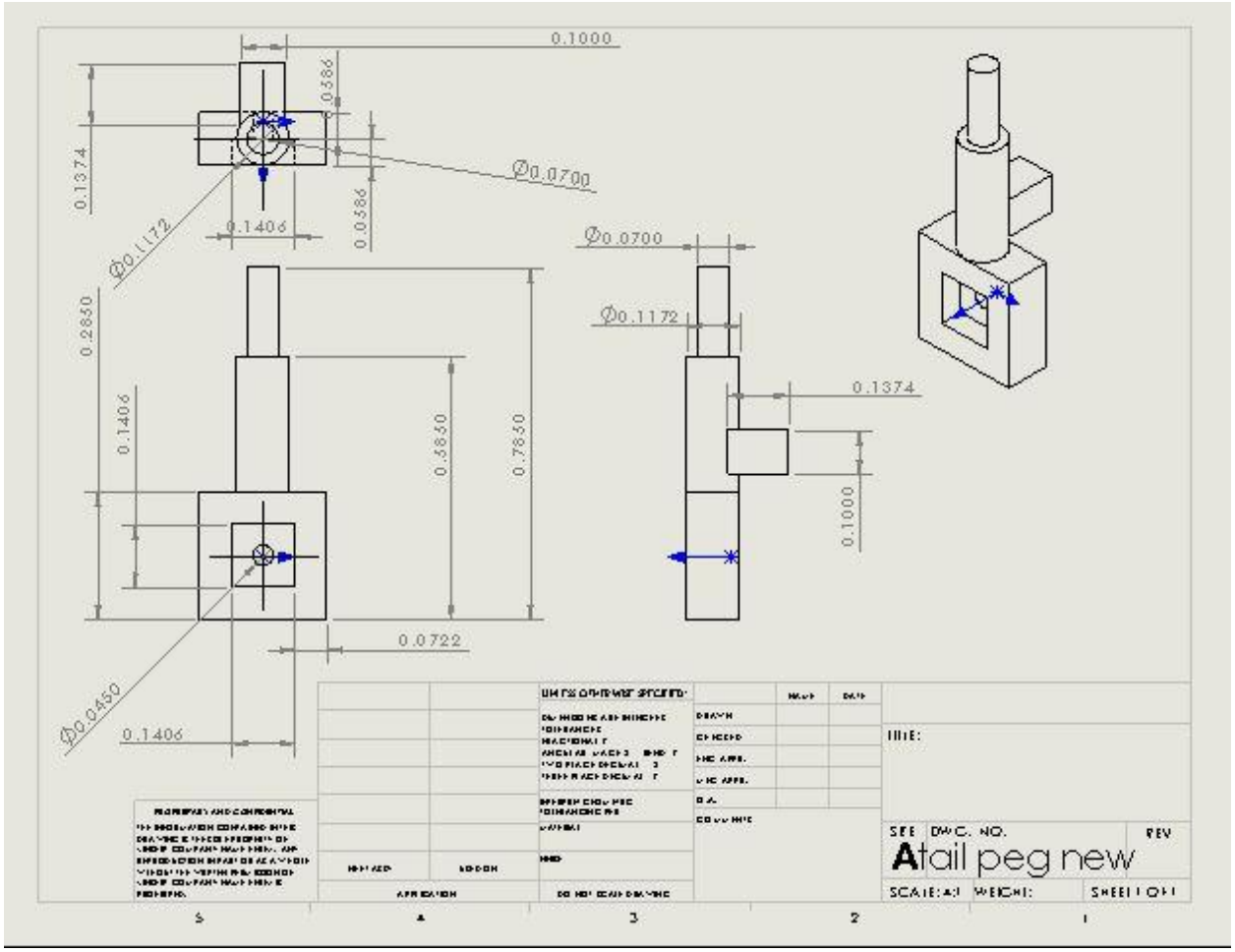
0.1000
0.0586
0.1374
Ø0.0700
0.0586
0.1406
Ø0.1172
0.2850
0.1406
0.3850
0.7850
0.0722
Ø0.0450
0.1406
Ø0.0700
Ø0.1172
0.1374
0.1000
TITLE:
SIZE
DWG. NO.
REV
Atail peg new
SCALE:4:1
WEIGHT:
SHEET 1 OF 1

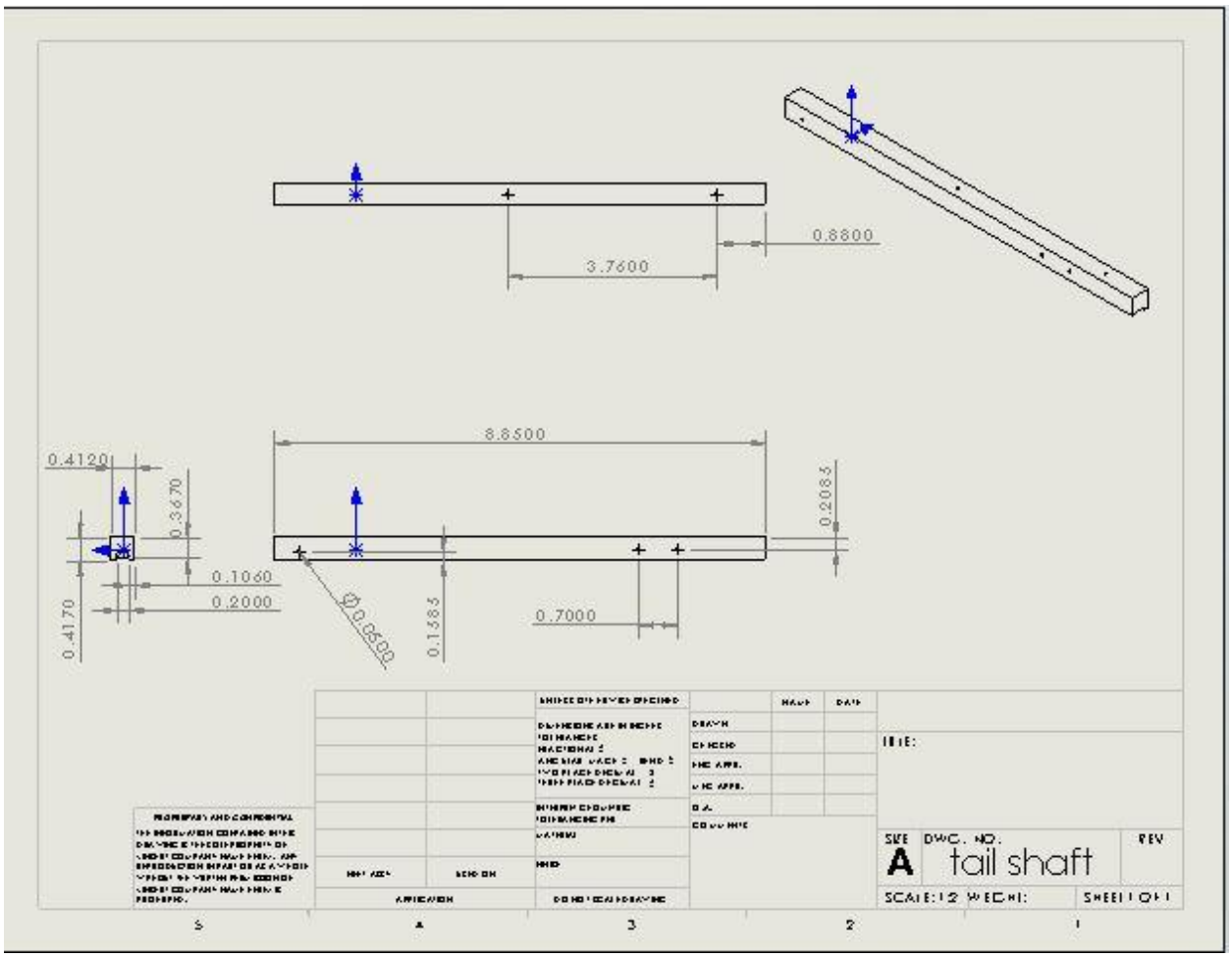
0.8800
3.7600
8.8500
0.4120
0.3670
0.2083
0.1060
0.2000
0.4170
Ø0.6500
0.1383
0.7000
SIZE
A
DWG. NO.
tail shaft
REV
SCALE: 1:2
WEIGHT:
SHEET 1 OF 1

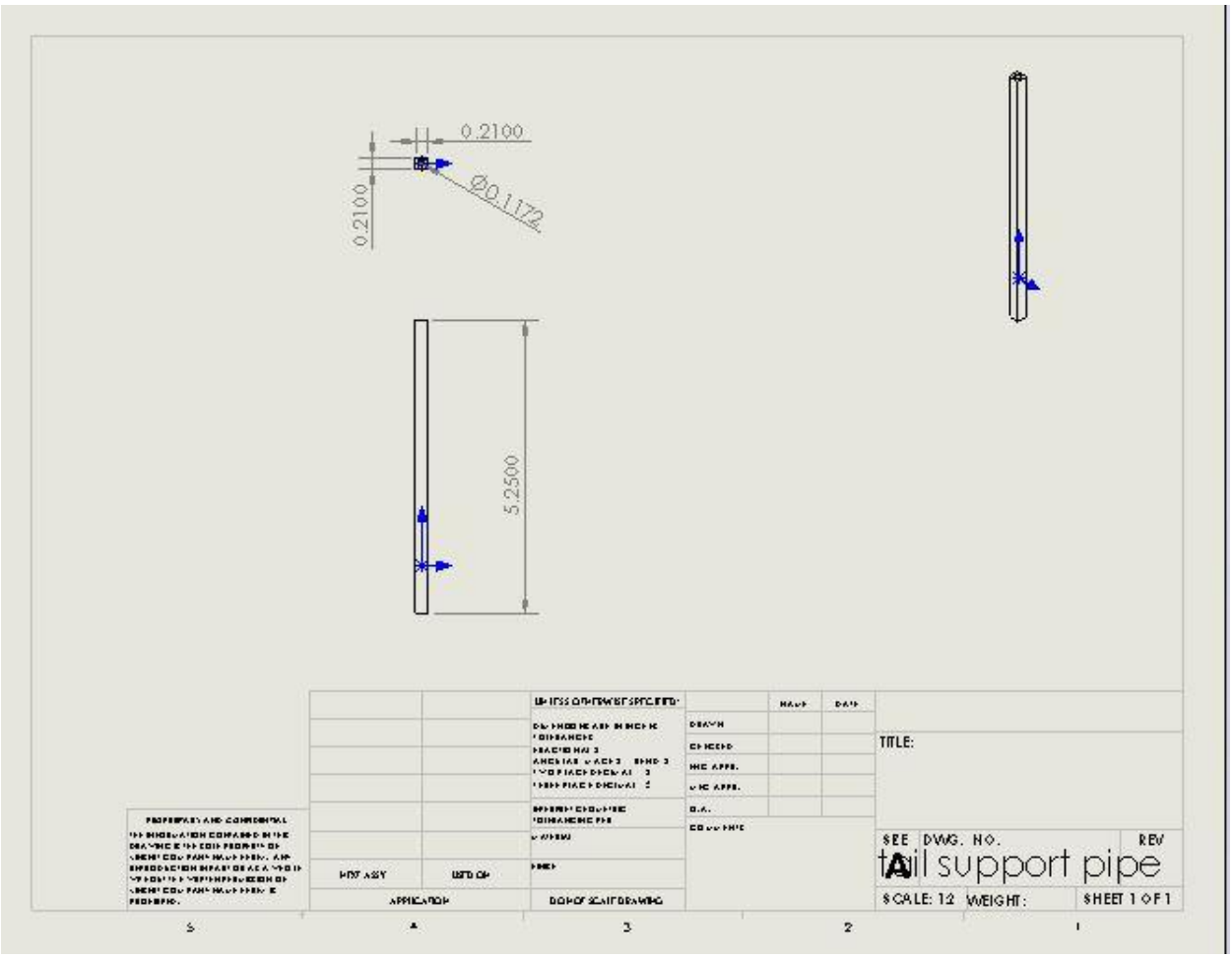
0.2100
0.2100
Ø0.1172
5.2500
TITLE:
SIZE
DWG. NO.
REV
tail support pipe
SCALE: 1:2
WEIGHT:
SHEET 1 OF 1

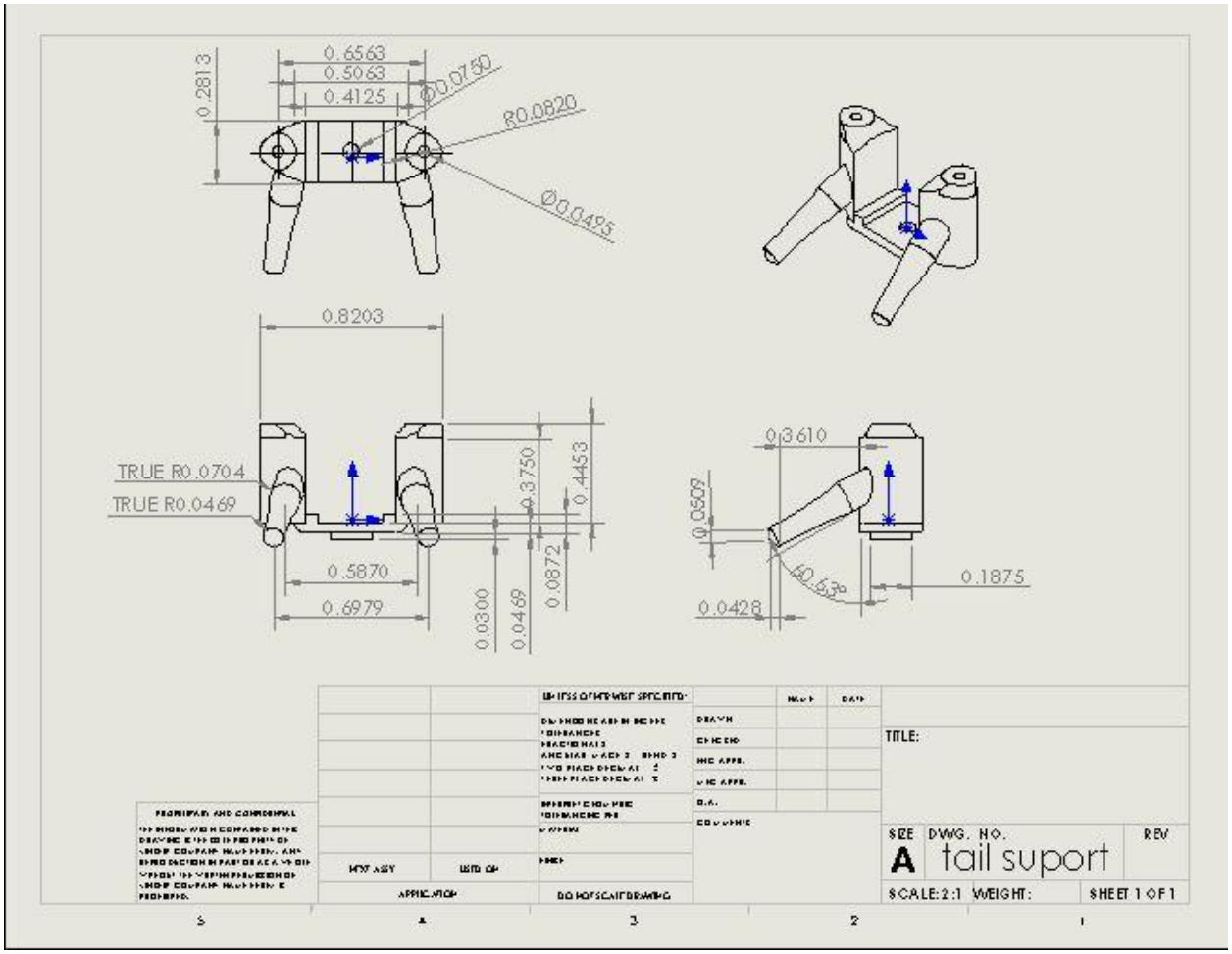
0.6563
0.5063
0.4125
0.2813
Ø0.0750
R0.0820
Ø0.0495
0.8203
TRUE R0.0704
TRUE R0.0469
0.3750
0.4453
0.5870
0.6979
0.0300
0.0469
0.0872
0.3610
0.0509
60.63°
0.1875
0.0428
TITLE:
SIZE
A
DWG. NO.
tail suport
REV
SCALE:2:1
WEIGHT:
SHEET 1 OF 1

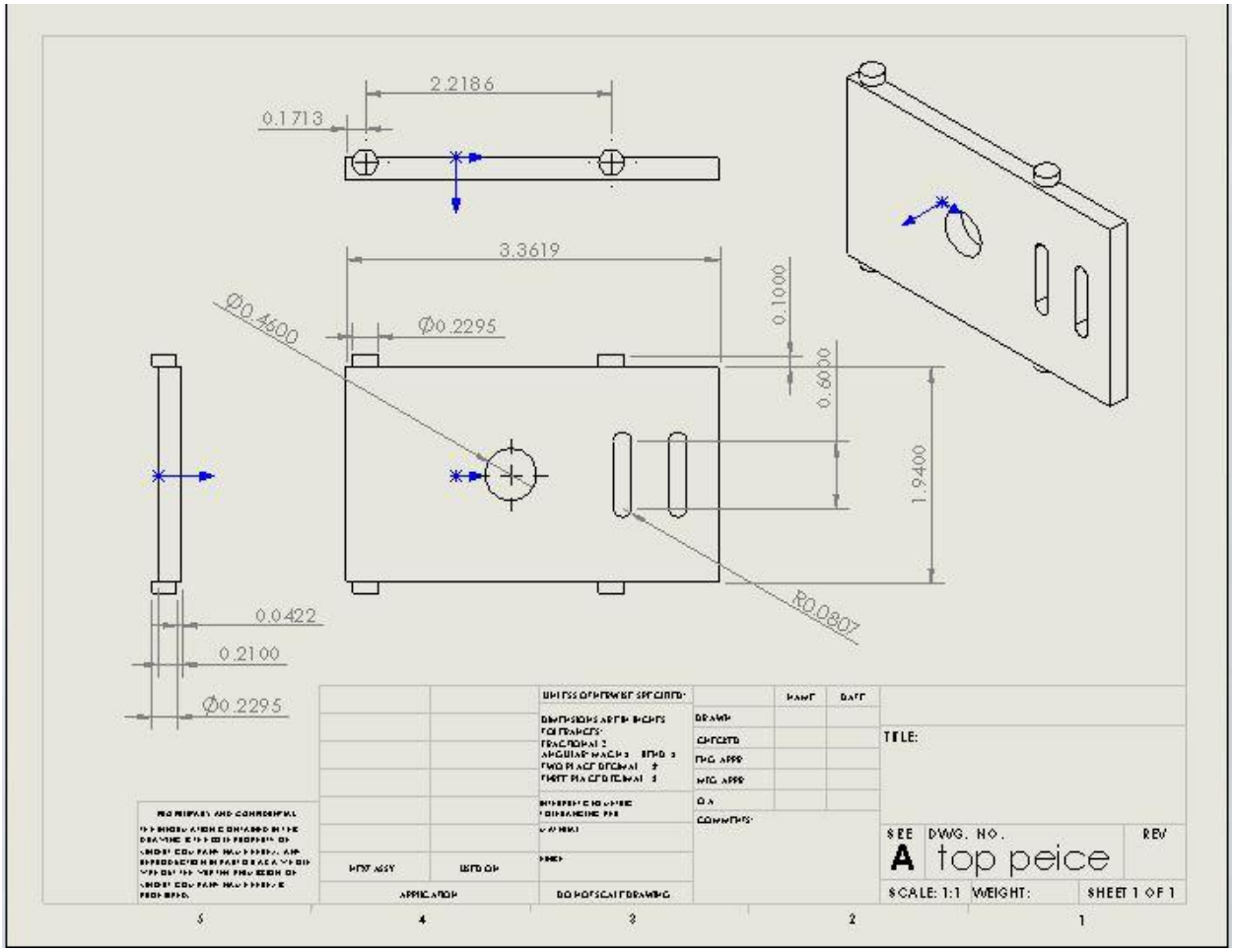
2.2186
0.1713
3.3619
Ø0.4600
Ø0.2295
0.1000
0.6000
1.9400
R0.0807
0.0422
0.2100
Ø0.2295
TITLE:
SIZE
A
DWG. NO.
top peice
REV
SCALE: 1:1
WEIGHT:
SHEET 1 OF 1